SPECIFICATION APPLIED

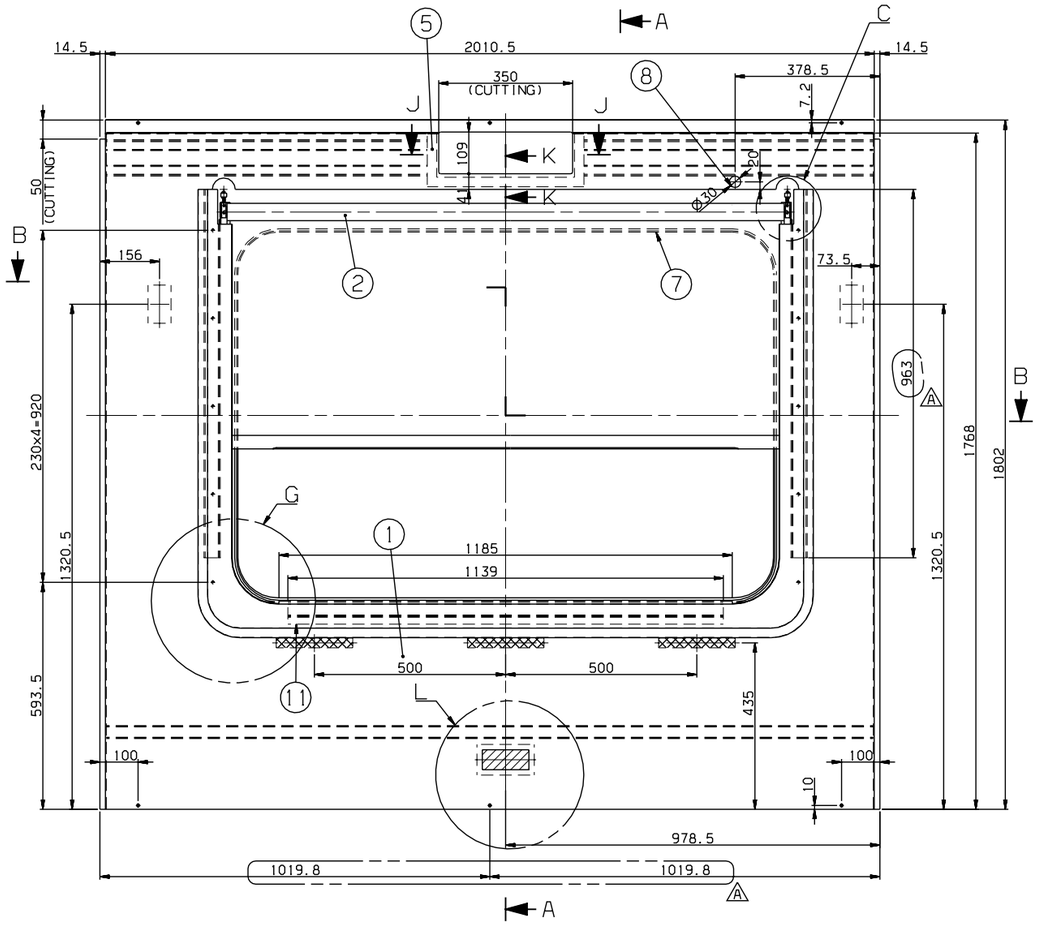

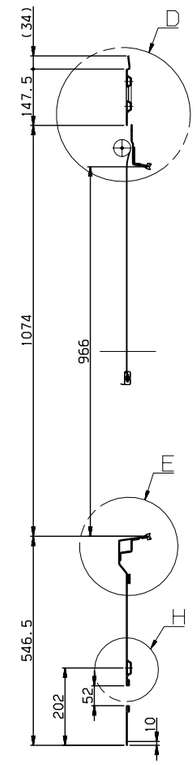

SECTION A-A

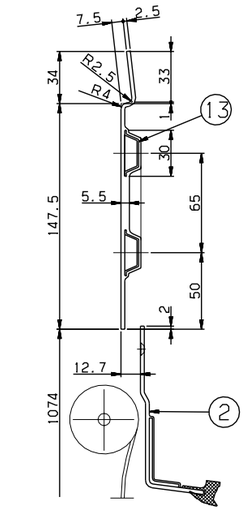

DETAIL D
SCALE=1/2

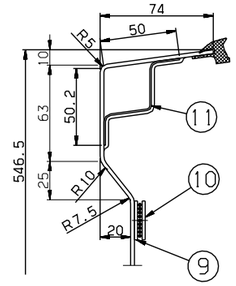

DETAIL E
SCALE=1/2

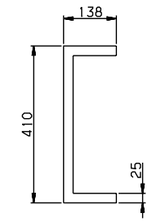

DETAIL #5
SCALE=1/8

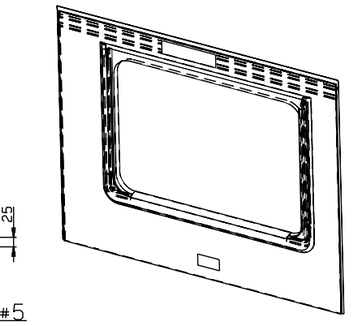

ISO VIEW

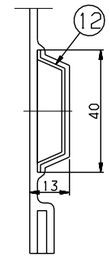

DETAIL H
SCALE=1/1

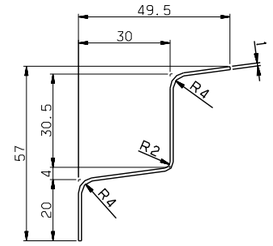

DETAIL #11
SCALE=1/1

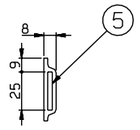

SECTION K-K

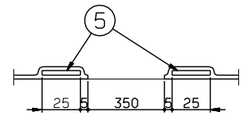

SECTION J-J
SCALE=1/2

NOTE

1. AN INTERIOR PANEL'S COLOR(RAL 7047) AND SURFACE SHALL BE MANUFACTURED AFTER SAMPLE'S APPROVAL BY CUSTOMER
2. PART 7 SHALL BE CUT ADEQUATELY AND USED
3. PART 8 IS TO PROTECT(TO CUT ADEQUATELY)
4. PART 2 SHALL BE WELL OPERATED UNDER CONDITION OF ASSEMBLY
5. PART 9 SHALL BE FIXED ON THE PART 1, AND PART 10 SHALL BE DELIVERED SEPERATETLY
6. THE INTERFACE BETWEEN PART 1 AND PART 2 SHALL BE STRONGLY SEALED
7. PART 4 SHOULD BE APPLIED WITH PART 15.

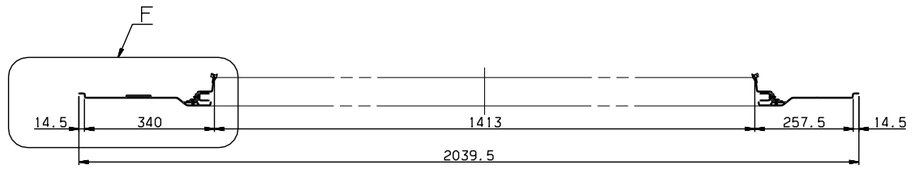

SECTION B-B

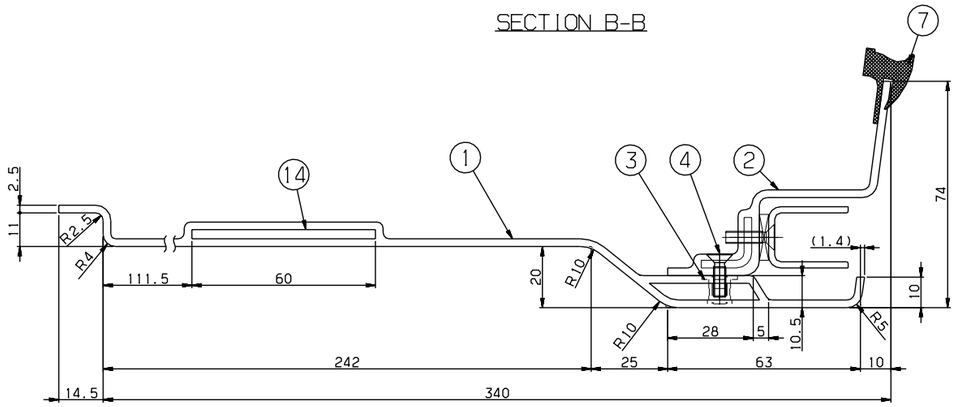

DETAIL F
SCALE=1/1

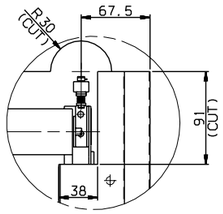

DETAIL C
SCALE=1/3

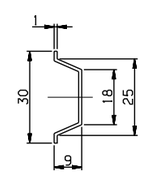

DETAIL #13
SCALE=1/1

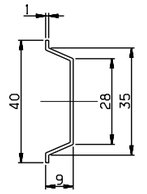

DETAIL #12
SCALE=1/1

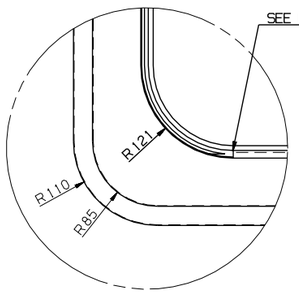

DETAIL G
SCALE=1/4

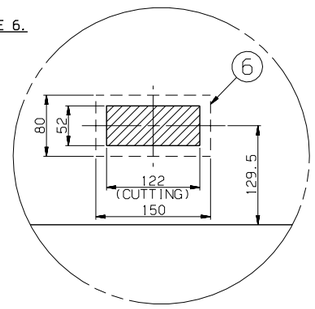

DETAIL L
SCALE=1/4

NO.	PART NO.	DESCRIPTION	MATERIAL	Q'TY	V.T	REMARKS
15	CP910004-406	ADHESIVE	ASSY	1		LOCTITE 242
14	RFP51127EJ0-014	SEAT,TAP	SUS304	2		PL T3x100x60
13	RFP51127EJ0-013	STIFFENER	A1050P	4		T1
12	RFP51127EJ0-012	STIFFENER	A1050P	1		T1
11	RFP51127EJ0-011	STIFFENER	SUS304	1		T1,L=1135
10	RFP51127EJ0-010	DUAL_LOCK,FASTENER	ASSY	3		3M,SJ-3550 L=200(DUAL TAPE)
9	RFP51127EJ0-009	DUAL_LOCK,FASTENER	ASSY	3		3M,SJ-3551 L=200(DUAL TAPE)
8	RFP90013AN0	RUBBER,BUSH	ASSY	1		F2.2332
7	RFP51127EJ0-007	RUBBER,SECTION	ASSY	1		RFP51011AN0,L=4600
6	RFP51127EJ0-006	SEAT,TAP	SUS304	2		PL T3x150x80
5	RFP51127EJ0-005	SEAT,TAP	SUS304	1		PL T3x410x138
4	RS60607-098S	SCREW,F.H	SUS304	10		M4x14
3	RFP51127EJ0-003	NUTSERT	SUS304	10		M4
2	RFP51009AN0	PANEL,BLIND WINDOW	ASSY	1		
1	RFP51127EJ0-001	PANEL	FRP	1		T2.5

승인 APP	검도 CHK	설계 DGN	제도 DRG
JeongYul Lee 2014.10.14	KeongBong Park 2014.10.14	HeonUk Lee 2014.10.14	HeeSook Jeong 2014.10.14

재질 MAT'L ASSY
중량 G.W
명 칭 TITLE: WINDOW,MASK,TYPE V
도번 DRG. NO: RFP51127EJ0
MS
Ver. 00
Rev. -A
RSD1402
RFP-
SCALE 1/8
매수 SHEET 1 of 1
SIZE A1
HYUNDAI Rotem 현대로템주식회사

MARK	DATE	DETAIL OF REVISION(E.C ZONE)	E.C NO.	DGN	CHK	APP
Ax4	2014.12.18	ADDED PART NO.#15 & DIMENSION	RSD1402-U071	H.U.LEE	K.B.PARK	J.Y.LEE

참조 REF. NO.

본 도면은 당사 재산권자의 허가없이 무단복사/배포 금지됨. PROPERTY OF ISSUING ENTITY, CANNOT BE DISTRIBUTED OR REPRODUCED WITHOUT AUTHORIZATION.

CATIA

일반공차 GENERAL TOLERANCE			
치수 DIMENSION	~ 6	0.05	0.1
	~ 30	0.1	0.2
	~ 120	0.15	0.3
	~ 315	0.2	0.5
	~ 1M	0.3	0.6
	~ 2M	0.5	1.2
	~ 4M	0.8	2.0
	~ 8M	-	3.0
	~ 12M	-	4.0
	~ 15M	-	5.0
	~ 20M	-	6.0
등급 GRADE		A	B
절삭 가공 MACHINING (±)			
등급 GRADE		A	B
주조 CASTING (±)			
등급 GRADE		A	B
용접 구조물 WELDING (±)			
등급 GRADE		A	B
치수 DIMENSION	~ 6	0.5	1
	~ 30	1	1.5
	~ 120	1.5	2
	~ 315	2	3
	~ 1M	3	4
	~ 2M	4	5
	~ 4M	5	7
	~ 8M	7	10
	~ 12M	10	14
	~ 15M	12	16
	~ 20M	14	18
등급 GRADE		A	B
주조 CASTING (±)			
등급 GRADE		A	B
용접 구조물 WELDING (±)			
등급 GRADE		A	B
치수 DIMENSION	~ 6	2	4
	~ 30	2	3
	~ 120	2	3
	~ 400	2	3
	~ 800	3	4
	~ 1600	4	5
	1600 ~	-	7
등급 GRADE		A	B
절삭 가공 MACHINING (±)			
등급 GRADE		A	B
주조 CASTING (±)			
등급 GRADE		A	B
용접 구조물 WELDING (±)			
등급 GRADE		A	B
치수 DIMENSION	~ 6	0.1	0.2
	~ 30	0.2	0.5
	~ 120	0.3	0.8
	~ 315	0.5	1.2
	~ 1M	0.6	2.0
	~ 2M	1.2	3.0
	~ 4M	2.0	4.0
	~ 8M	3.0	5.0
	~ 12M	4.0	6.0
	~ 15M	5.0	7.0
	~ 20M	6.0	8.0
등급 GRADE		A	B
주조 CASTING (±)			
등급 GRADE		A	B
용접 구조물 WELDING (±)			
등급 GRADE		A	B
치수 DIMENSION	~ 6	0.1	0.2
	~ 30	0.2	0.5
	~ 120	0.3	0.8
	~ 315	0.5	1.2
	~ 1M	0.6	2.0
	~ 2M	1.2	3.0
	~ 4M	2.0	4.0
	~ 8M	3.0	5.0
	~ 12M	4.0	6.0
	~ 15M	5.0	7.0
	~ 20M	6.0	8.0
등급 GRADE		A	B
주조 CASTING (±)			
등급 GRADE		A	B
용접 구조물 WELDING (±)			
등급 GRADE		A	B
치수 DIMENSION	~ 6	0.05	0.1
	~ 30	0.1	0.2
	~ 120	0.15	0.3
	~ 315	0.2	0.5
	~ 1M	0.3	0.6
	~ 2M	0.5	1.2
	~ 4M	0.8	2.0
	~ 8M	-	3.0
	~ 12M	-	4.0
	~ 15M	-	5.0
	~ 20M	-	6